0161 SERIES

2.54x2.54mm(0.1"x0.1"), Female Header, Dual Row, Right Angle

Specifications
Current Rating: 3 Amp
Insulation Resistance: 500 MΩ Min.
Dielectric Withstanding: 600 VAC
Contact Resistance: 20 mΩ Max.
Operating Temperature: −40°C to +105°C

Materials
Contact Material: Copper Alloy
Contact Plating: Gold/Tin over Nickel
Insulator: Glass Filled Polyester (UL 94V−0)

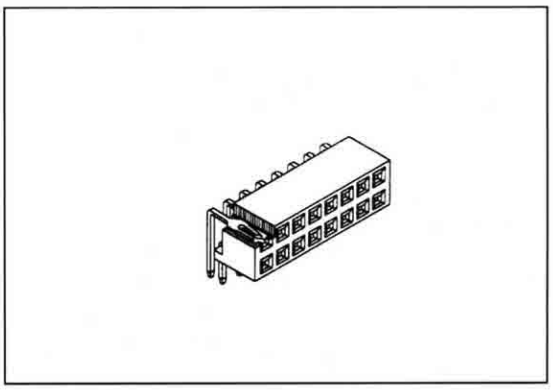

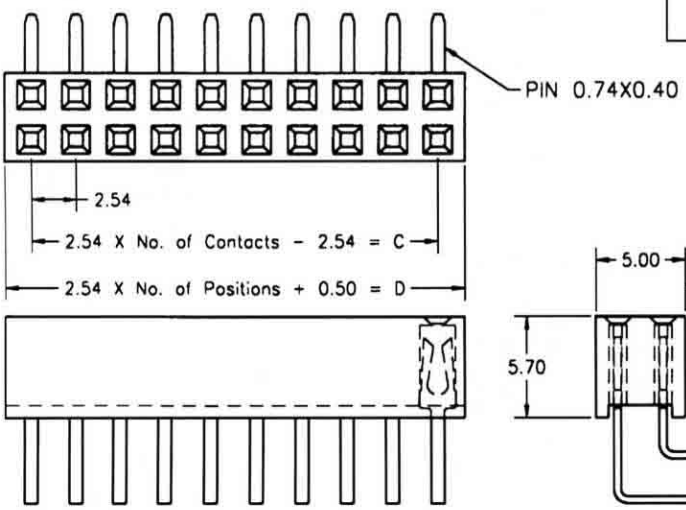

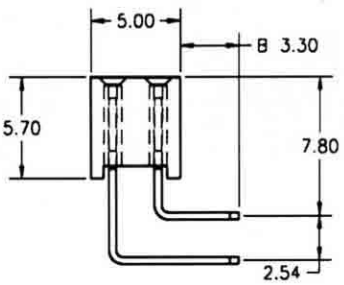

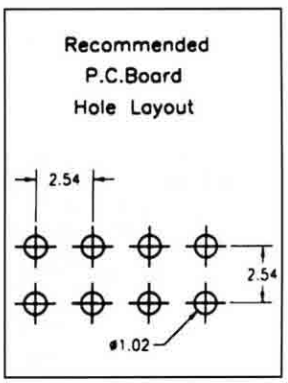

No. of Pins/Row	Dimension Information C	D	No. of Pins/Row	Dimension Information C	D	No. of Pins/Row	Dimension Information C	D	No. of Pins/Row	Dimension Information C	D
02	2.54	5.58	13	30.48	33.52	24	58.42	61.46	35	86.36	89.40
03	5.08	8.12	14	33.02	36.06	25	60.96	64.00	36	88.90	91.94
04	7.62	10.66	15	35.56	38.60	26	63.50	66.54	37	91.44	94.48
05	10.16	13.20	16	38.10	41.14	27	66.04	69.08	38	93.98	97.02
06	12.70	15.74	17	40.64	43.68	28	68.58	71.62	39	96.52	99.56
07	15.24	18.28	18	43.18	46.22	29	71.12	74.16	40	99.06	102.10
08	17.78	20.82	19	45.72	48.76	30	73.66	76.70			
09	20.32	23.36	20	48.26	51.30	31	76.20	79.24			
10	22.86	25.90	21	50.80	53.84	32	78.74	81.78			
11	25.40	28.44	22	53.34	56.38	33	81.28	84.32			
12	27.94	30.98	23	55.88	58.92	34	83.82	86.86			

Ordering Information

0161 - 2 4 07 X X 0

2: Gold

Position